A 0.4-V CMOS 65-nm Programmable-Phase Shifter using Active Inductor for sub-GHz Applications

Raul P. de Oliveira
Federal University of Pampa
Alegrete, Brazil
raulolivieira.aluno@unipampa.edu.br

Lucas Compassi-Severo
Aeronautics Institute of Technology
São José dos Campos, Brazil
severolcs@ita.br

***Abstract*—This paper presents the preliminary results of a lossless ultra-low-voltage active inductors-based balanced phase shifter (PS) intended to be used in RF systems. The proposed PS is implemented using sections of L-C differential network, with two capacitors and only one active inductor (AI), where the lossless ULV AI is obtained with an inverter-based operational transconductance amplifier (OTA). The circuit was designed in a CMOS 65 nm process to work with a supply voltage of only 0.4 V to operate at the 400 MHz RF band. The common-mode stability is obtained by using a common-mode feedback (CMFB) circuit that also compensates for the output DC voltage due to the process, voltage and temperature (PVT) variations. The circuit was designed and the results were verified using the Cadence Virtuoso Design Environment®. The AI presented synthesized inductance around 60 nH at 400 MHz, a quality factor (Q) of 224, and a self-resonant frequency (SRF) of 1.57 GHz. The programmable PS implemented presented 78° phase shift range and the circuit power dissipation is 599.2 μW.**

***Keywords*—phase shifter, active inductor, sub-GHz systems.**

I. Introduction

The evolution of telecommunication systems has addressed the demand for novel circuit implementations that can operate at the RF and microwave range and are optimized in terms of occupied area and power consumption. Microelectronics technology plays an important role in these applications since it is possible to implement cost-effective complex electronics systems using a small CMOS silicon die [5]. These integrated circuits can not only have passive and active RF circuit implementations but also analog-to-digital converters and digital signal processors in the same chip.

Besides the great importance of microelectronics in RF circuit implementations, its use in sub-GHz systems is limited due to the large size and poor quality factor of the planar inductors available in the sub-micron CMOS process. It is an issue in the design of inductor-dependent circuits such as low-noise amplifiers (LNAs), oscillators, impedance matching networks (IMN), and phase shifters (PS) [4]. In some of these circuits, the magnetic inductor behavior can be emulated at the electrical level by using active circuits known as active inductors (AI).

The AI implementation can use small-size CMOS transistors occupying a small portion of the area and presenting an increased qualify factor in comparison to planar inductors [6]. Active inductor implementations originate from the theory of gyrator [3]. This theory is defined by two transconductors connected in positive and negative inputs, making a back-to-back connection between both transconductors.

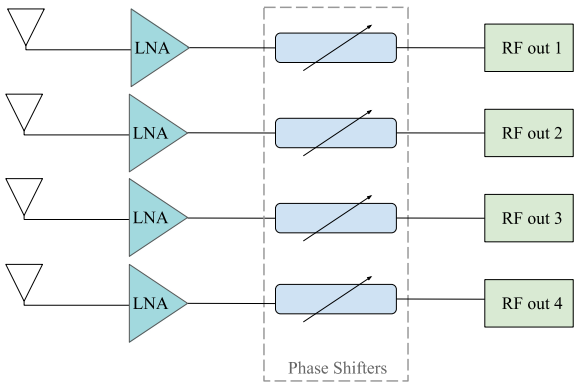

Fig. 1: Typical RF receiver system using phase shifters.

The gyrator-C-based AI can be employed in some applications to replace the planar inductor. An example of this application is the implementation of phase shifters (PS) for antenna beamforming. Fig. 1 represents a block diagram of a typical receiver system that employs a phase shifter next to the antenna [2]. In this example, it is possible to obtain different beamforming by combining the RF outputs 1 to 4 with different changing the signal phase of each receiver signal. Due to the higher number of PS circuits used in this kind of application and the need for variable/programable inductance, the AI implementation should present low power dissipation and a smaller circuit area.

Based on these assumptions, this paper presents a novel ultra-low voltage (ULV) AI to be employed in low-power PS implementation. The proposed circuit is designed on a CMOS 65 nm to operate with only 0.4 V of power supply, to present 4-bit programmability and to be compatible with sub-GHz PS applications.

The organization of this paper is given: Section II presents proposed ULV active indutor design, Section III shows the application of the AI on the phase shifter design and finally, Section IV concludes this work and proposes future works.

II. Proposed ULV Active Inductor

The proposed balanced lossless active inductor is shown in Fig. 2. It is composed of transconductors (T1 and T2)

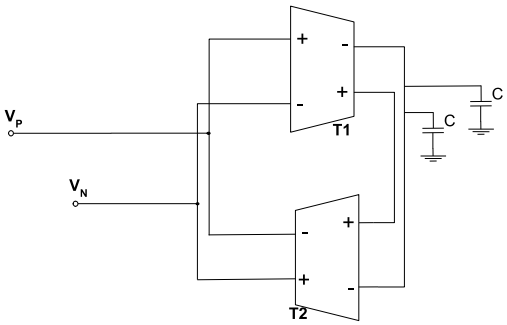

Fig. 2: Gyrator-C network.

based on operational transconductance amplifiers (OTA). The synthesized inductance can be evaluated by (1):

$$L = \frac{C}{gm_1.gm_2} \tag{1}$$

when C is the equivalent capacitance at node x, gm_1 and gm_2 are the equivalent gate transconductance.

Using differential amplifiers topology to develop the transconductors, the input impedance at the V_P and V_N terminals are also differential, and this input impedance is given by the transconductances of each amplifier (g_{m1} and g_{m2}), that is, from g_m/I_D, the generated inductance depends on the drain currents through the amplifiers.

Transconductors T1 and T2 are implemented to operate with 400 mV of power supply, so the schematic of these circuits is shown in Fig. 3. The main amplifier is composed of two CMOS inverters (transistors M_{1A}, M_{1B}, M_{2A} and M_{2B}), then each transistor operates with V_{DS} = 200 mV.

Therefore, the DC output level is unstable to operate with ultra-low voltage, so, to provide stability to the circuit was implemented two stages of common-mode feedback (CMFB), composed of a bias circuit and replica amplifier [1]. The first stage of CMFB is based on an error amplifier that makes the comparison between the output DC levels through the resistors (R_A and R_B) and $VDD/2$ (200 mV), the error amplifier is responsible for holding the DC output in 200 mV, and it is shown in Fig. 5. However, only one stage can not set the desired stability to the circuit, so, the replica amplifier improves the DC level. Both of these circuits are connected to the bulk terminal of transistors M_{1A} and M_{1B}.

Furthermore, to bias, the NMOS and PMOS transistors on the main amplifier are implemented with a low-pass and a high-pass filter, respectively, for the circuit to be biased by the DC level on input nodes.

A. Proposed AI Small-Signal Modeling

The synthesized inductance value given by (1) is very simplified to perform an accurate analysis of the AI circuit.

A simple way to value the AI is by considering the inductor equivalent model shown in Fig. 4. It is composed of a lossless inductor (L), a series resistance (R_S), a parallel resistance (R_p) and a parasitic capacitance (C). The equivalent differential mode input impedance can be obtained by considering symmetric circuits as given by (2).

$$Z_{in}(s) = 2 \times \frac{sLR_p + R_sR_p}{s[C.R_p(sLR_s) + L] + R_s + R_p} \tag{2}$$

The equivalent differential input impedance (Zin) of the proposed circuit can be obtained by analyzing the small-signal AC model. Equation (3) presents the (Zin) expression for the proposed circuit. In this equation g_{m1} and g_{m2} are the transconductance, g_{ds1} and g_{ds2} are the output transconductance, C_{vi}, C_{ix}, C_{vx} are the equivalent parasitic capacitances between the input terminal and internal node, input to ground and internal node to ground, respectively. Besides the accuracy, this equation is not simplified enough for analytical analysis and to obtain the equivalent inductance value. Thus, the evaluation of the equivalent inductance should be performed numerically.

B. Inverter-Based OTA Design and Transistors Sizing

The main amplifier is designed to operate with 400 mV of power supply, so the transistors are sized based on a drain current equal to 10 μA guarantees a drain-source voltage equal to 200 mV, i.e., the channel length of transistors M_{1A}, M_{1B}, M_{2A} and M_{2B} is 300 nm, and the channel width of M_{1A} and M_{1B} is 6.1 μm, while the transistors M_{2A} and M_{2B} has 3 μm of channel width. The transistors used in ULV inverter-based OTA are all low threshold voltage (Low-VT).

To implement the bias circuit, the resistance values used in R_A and R_B is 10 MΩ. The pseudo-differential amplifier used on the error amplifier allows the comparison between the DC output voltage and VDD / 2, that is, when the DC level on output nodes of the main amplifier is lower than 200 mV, the circuit provides a gain until the DC level increases to 200 mV and then biasing the PMOS transistors with V_B = 200 mV. When the DC output voltage is higher than VDD/2, the circuit also calibrates the bulk voltage to the same voltage level.

The error amplifier is shown in Fig. 5, this topology is similar to a differential pair amplifier, with a unique difference that has two input nodes and only one out. So, this circuit works as a comparator between In+ and In-. The error amplifier needed a high DC gain, so, to reach this requirement, the channel dimensions of the CMOS transistors are: $W_{M_{PE1}}$ = $W_{M_{PE2}}$ = 38 μm, $W_{M_{NE1}}$ = $W_{M_{NE2}}$ = 15 μm and the channel length of all the transistors used in this sub-circuit is L_P =L_N = 300 nm.

Due to the ULV operation, the main amplifier needs one more sub-circuit to maintain the required DC levels of V_{DS} in 200 mV of the transistors P-channel and N-channel. So, to provide the needed voltage control to the circuit is implemented the replica amplifier (represented in purple in Fig.3). The transistors channel sizes used in the replica amplifier are $L_{M_{3A}}$ = $L_{M_{3B}}$ = $L_{M_{4A}}$ = $L_{M_{4B}}$ = 300 nm, $W_{M_{3A}}$ = $W_{M_{3B}}$ = 21.5 μm and $W_{M_{4A}}$ = $W_{M_{4B}}$ = 14.4 μm, the multiples of NMOS is equal to M_N = 1 and PMOS is M_P = 3.

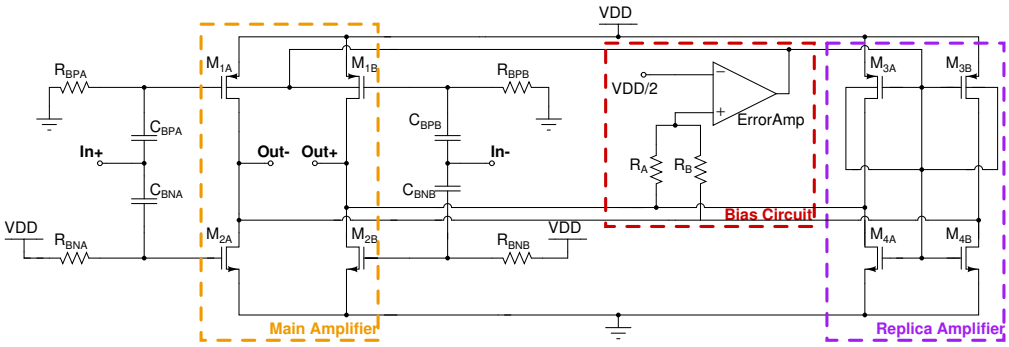

Fig. 3: ULV Inverter-Based OTA.

$$Z_{in}(s) = 2 \times \frac{s(C_{ix} + C_{vx}) + g_{ds1}}{(sC_{ix} - g_{m1})(-g_{m2} - sC_{ix}) + \Big[s(C_{ix} + C_{vx}) + g_{ds1})(g_{ds2} + s(C_{vi} + C_{ix}))\Big]} \tag{3}$$

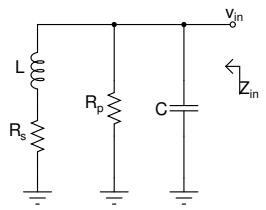

Fig. 4: Electrical equivalent model of an inductor.

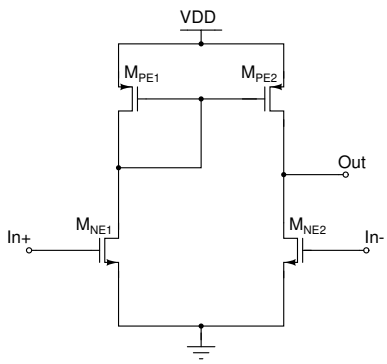

Fig. 5: Pseudo-differential Amplifier.

The Cadence Virtuoso Design Environment® was used to simulate the circuits and to obtain the equivalent input impedance. For these analyses the AI circuit was implemented using 10 multiples for transistors M_{1A}, M_{2A}, M_{1B} and M_{2B} of both transconductors, ie, the drain current in both amplifiers is I_D = 107.2 μA. Fig. 6 shows the results of the obtained input impedances in the frequency range from 100 MHz to 10 GHz. Curves shown in blue and orange represent the simulated result of the complete circuit and the single-end small-signal equivalent circuit. In yellow is presented the inductor electrical modeling considering the circuit of Fig. 4 and (2). For this curve, it was considered L = 73.45 nH, C = 150 fF, R_s = 46.15 Ω and R_p = 7.32 kΩ. Considering the small-signal values of g_m, gds and parasitic capacitances obtained by simulation, the curve in purple shows the result of the evaluation of expression (3).

In order to evaluate the inductive region of the input impedance the impedance shown in Fig. 6 is transformed into an inductance value by considering that $L = |Z_{in}|/2\pi f$. Fig. 7 shows the result of this transformation in which is possible to see that the inductance region of the curve (constant region) occurs in the frequency range from 200 MHz to about 800 MHz. The generated inductance is approximately equal to 62.71 nH at the 400 MHz frequency and results in a quality factor (Q) of 224.28. The AI self-resonant frequency (SRF) occurs around 1.57 GHz.

The proposed inductor presented a total current of 428 μA drained from the 0.4 V power supply that is equivalent to a DC power dissipation of 171.2 μW.

C. Programmable Active Inductor Implementation

To employ the proposed AI in a RF phase shifter it is needed to make it possible to change the inductance value.

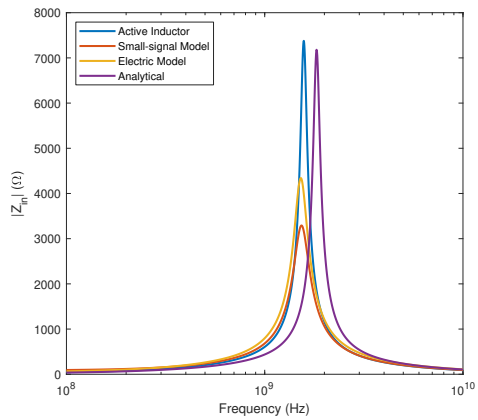

Fig. 6: Frequency response of equivalent absolute impedance.

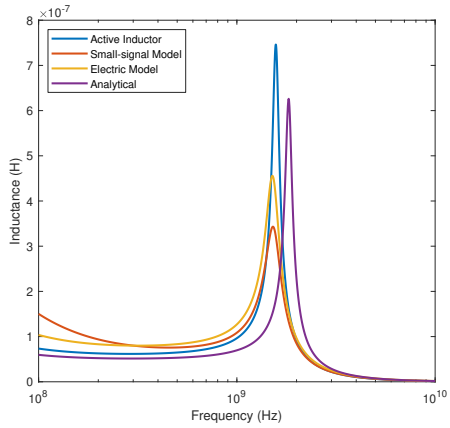

Fig. 7: Frequency response of equivalent inductance.

In this work, we are not interested in continuous variation of the inductor due to the need to change the transistor biasing operation. We intend to adjust the equivalent inductance by changing the number of transistors associated in parallel to obtain the transconductances. To analyze the behavior of impedance and inductance as a function of the multiples of the two amplifiers (M1 and M2), the circuit was simulated for two distinct frequencies, 400 MHz and 1 GHz. Figs. 8-a and 8-b show the surfaces obtained for Zin and L when the M1 and M2 are changed from 5 to 25, respectively. As can be seen, both multipliers can be used to modify the input and equivalent inductance.

In order to simplify the circuit implementation we decided to implement the programmable active inductor as shown in Fig. 9. This circuit considers that the OTA 2 is implemented in a fixed way using 10 multipliers and the OTA1 is obtained by the association of 4 OTAs with a number of multipliers of 10, 13, 17 and 20, respectively. The V_{ENABLE} signal is used to enable or disable each one of the OTAs and to adjust the equivalent inductance value.

The approach used to implement the V_{ENABLE} is shown in Fig. 10. A CMOS inverter is used to obtain the control inverting signal $\overline{V}_{ENABLE}$. These signals are used to bias the gate of the NMOS and PMOS transistors. To enable the OTA is needed to set V_{ENABLE} = 0.4 V and $\overline{V}_{ENABLE}$ = 0 V while to disable the levels are V_{ENABLE} = 0 V and $\overline{V}_{ENABLE}$ = 0.4 V.

The programmable PS presents a total power dissipation of 599.2 μW when powered with the 0.4 V supply.

III. Phase Shifter Design

The phase shifter was designed using a T-differential network, composed of four capacitors and only one active inductor, as shown in Fig. 11. Using electrical SPICE simulations the C capacitor was defined to 4.5 pF in order to present improved phase variation according to the programmed inductor value.

To evaluate the PS operation we have considered two 50 Ω connected to the input and output terminals. Using the S parameters simulation on Cadence Virtuoso software, the phase of S_{12} was evaluated by changing the AI. Fig. 12 shows the results of simulated phase of of the PS. It is possible to see that at 400 MHz the phase can varies from -280° to -202° according to the AI configuration, resulting in phase

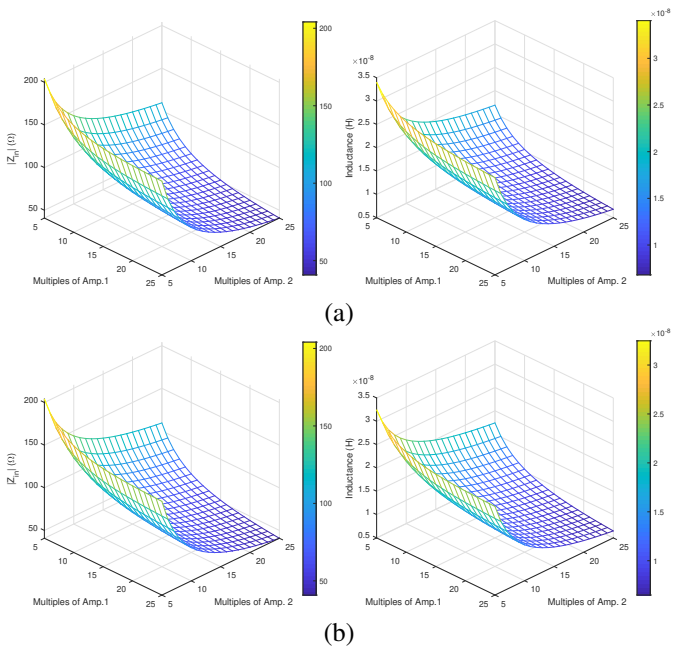

Fig. 8: Input impedance and equivalent inductance for M1 and M2 changing between 5 and 25: (a) at 400 MHz and (b) at 1 GHz.

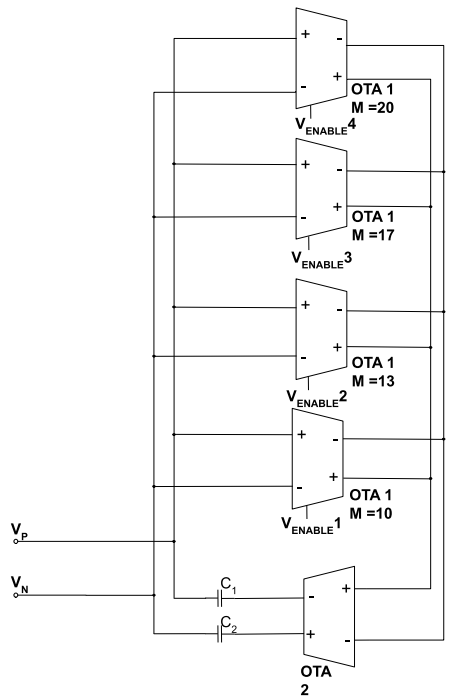

Fig. 9: Proposed four-bits programmable AI.

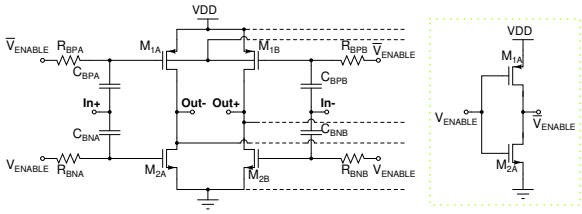

Fig. 10: Proposed OTA Enable/Disable strategy.

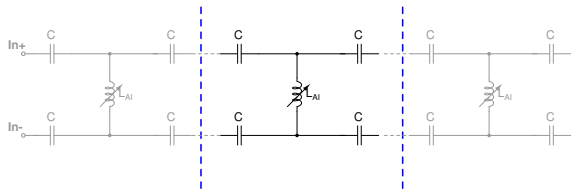

Fig. 11: Proposed phase shifter.

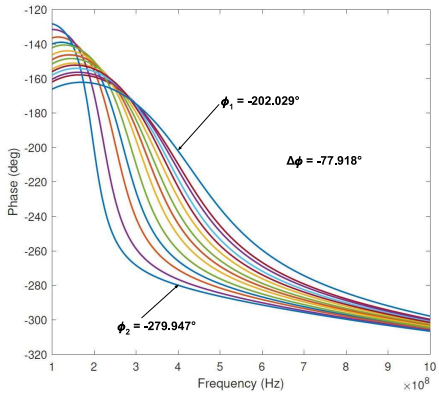

Fig. 12: Simulated S_{12} phase of the designed phase shifter.

shift ($\Delta\phi$) of 78°. Table I sumarizes the $\Delta\phi$ according to the Enable voltages of OTA1. Considering that a 360° phase shift is needed, four sections can be used for this implementation.

IV. Conclusion

This paper has presented the preliminary results of the design a programmable phase shifter (PS) based on an ULV active inductor (AI) implemented in a 65nm CMOS process. The implemented PS presented a phase shift variation of 78° at the frequency of 400 MHz. The circuit operate with supply voltage of only 0.4 V and present power dissipation of 599.2 μW. To the best of our knowledge it is the first time when a programmable PS using ULV inverter-based OTA is presented in literature.

In future works, we intend to design the circuit layout, to analyse the process, voltage and temperature variations and to prototype the integrated circuit to allow experimental validation.

Acknowledgment

The authors would like to thank CNPq (Grants 407344/2022-5, 303609/2023-0, 420693/2023-8) and Eldorado Institute for providing partial support for this work.

References

[1] Lucas Compassi-Severo and Wilhelmus Van Noije. "A 0.4-V 10.9- μ W/Pole Third-Order Complex BPF for Low Energy RF Receivers". In: *IEEE Transactions on Circuits and Systems I: Regular Papers* 66 (2019). DOI: 10.1109/TCSI.2019.2906206.

[2] Shiban Kishen Koul and Sukomal Dey. *Radio frequency micromachined switches, switching networks, and phase shifters*. CRC Press, 2019.

[3] H.G. Momen et al. "CMOS high-performance UWB active inductor circuit". In: *2016 12th Conference on Ph.D. Research in Microelectronics and Electronics (PRIME)*. 2016, pp. 1–4. DOI: 10.1109/PRIME.2016.7519552.

[4] Yunseo Park. "A CMOS Voltage Controlled Continuous Phase Shifter With Active Loss Compensation". In: *IEEE Microwave and Wireless Components Letters* 22.8 (2012), pp. 421–423. DOI: 10.1109/LMWC.2012.2207095.

[5] Tsung-Ying Wu and Jeng-Rern Yang. "A fully integrated voltage controlled phase shifter with lossless active inductors". In: *2018 7th International Symposium on Next Generation Electronics (ISNE)*. 2018, pp. 1–3. DOI: 10.1109/ISNE.2018.8394649.

[6] Xiao-Liang Wu et al. "A 2.2–4.2-GHz Wideband Analog Phase Shifter MMIC With Low RMS Phase/Amplitude Error". In: *IEEE Microwave and Wireless Technology Letters* 33 (2023). DOI: 10.1109/LMWT.2022.3221460.

TABLE I: Phase shift obtained at 400 MHz.

V_{ENABLE} (mV)				Phase @ 400 MHz (deg)
V1	V2	V3	V4	
400	0	0	0	-279.94
0	400	0	0	-276.51
0	0	400	0	-270.82
0	0	0	400	-265.82
400	400	0	0	-259.58
400	0	400	0	-250.96
400	0	0	400	-244.26
0	400	400	0	-244.13
0	400	0	400	-237.53
0	0	400	400	-229.25
400	400	400	0	-222.91
400	400	0	400	-218.21
400	0	400	400	-212.94
0	400	400	400	-209.67
400	400	400	400	-202.02